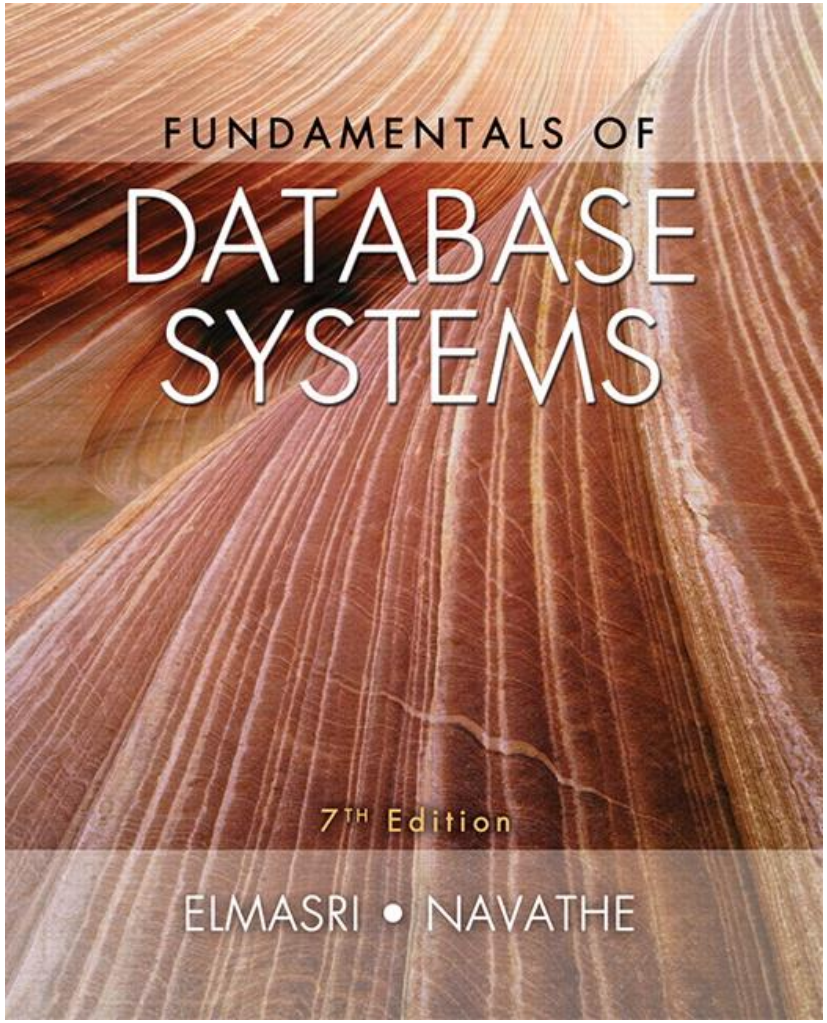

Copyright © 2016 Ramez Elmasri and Shamkant B. Navathe

CHAPTER 8

The Relational Algebra

Copyright © 2016 Ramez Elmasri and Shamkant B. Navathe

Chapter Outline

- Relational Algebra
  - Unary Relational Operations
  - Relational Algebra Operations From Set Theory
  - Binary Relational Operations
  - Additional Relational Operations
  - Examples of Queries in Relational Algebra
- Example Database Application (COMPANY)

Copyright © 2016 Ramez Elmasri and Shamkant B. Navathe

Relational Algebra Overview

- Relational algebra is the basic set of operations for the relational model
- These operations enable a user to specify **basic retrieval requests** (or **queries**)
- The result of an operation is a *new relation*, which may have been formed from one or more *input* relations
  - This property makes the algebra "closed" (all objects in relational algebra are relations)

Copyright © 2016 Ramez Elmasri and Shamkant B. Navathe

Relational Algebra Overview (continued)

- The **algebra operations** thus produce new relations
  - These can be further manipulated using operations of the same algebra
- A sequence of relational algebra operations forms a **relational algebra expression**
  - The result of a relational algebra expression is also a relation that represents the result of a database query (or retrieval request)

Copyright © 2016 Ramez Elmasri and Shamkant B. Navathe

COMPANY Schema

- .

Figure 5.7
Referential integrity constraints displayed on the COMPANY relational database schema.

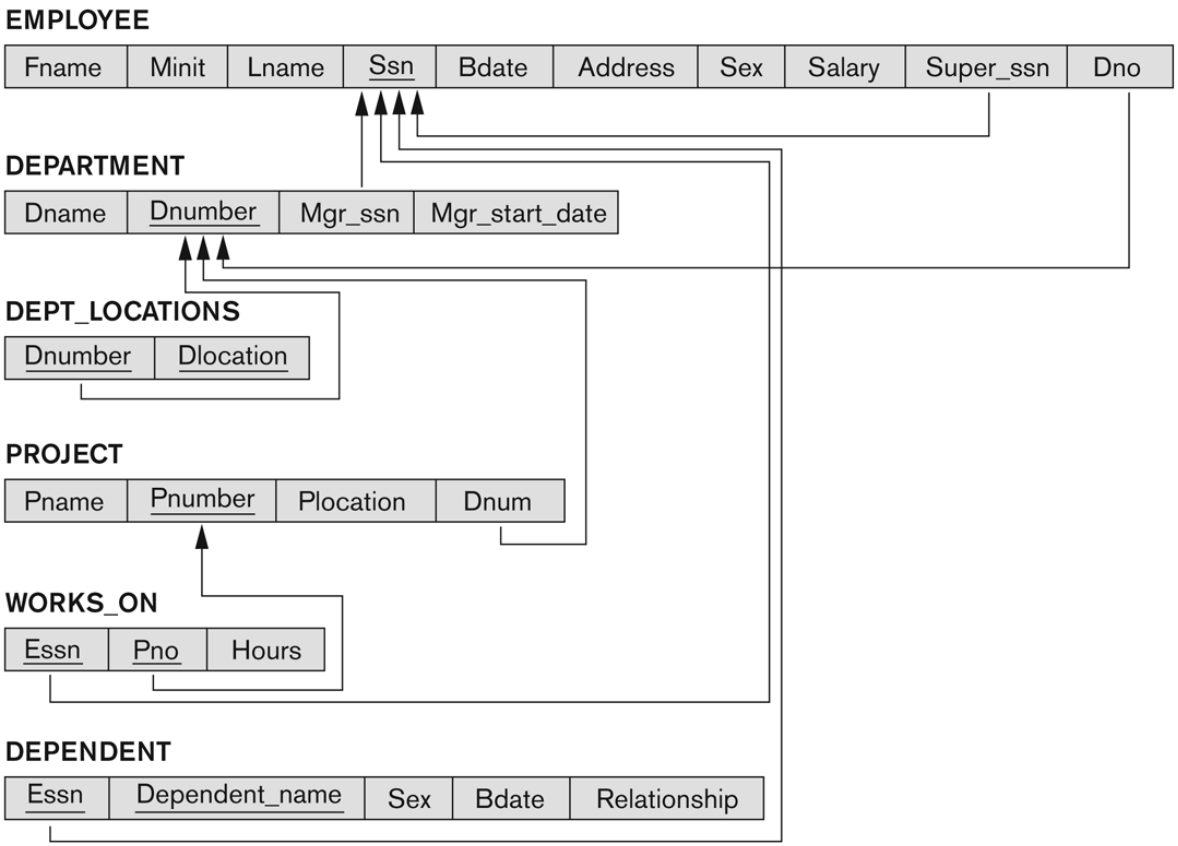

Copyright © 2016 Ramez Elmasri and Shamkant B. Navathe

The following query results refer to this database state

Figure 5.6
One possible database state for the COMPANY relational database schema.

EMPLOYEE

Fname	Minit	Lname	Ssn	Bdate	Address	Sex	Salary	Super_ssn	Dno
John	B	Smith	123456789	1965-01-09	731 Fondren, Houston, TX	M	30000	333445555	5
Franklin	T	Wong	333445555	1955-12-08	638 Voss, Houston, TX	M	40000	888665555	5
Alicia	J	Zelaya	999887777	1968-01-19	3321 Castle, Spring, TX	F	25000	987654321	4
Jennifer	S	Wallace	987654321	1941-06-20	291 Berry, Bellaire, TX	F	43000	888665555	4
Ramesh	K	Narayan	666884444	1962-09-15	975 Fire Oak, Humble, TX	M	38000	333445555	5
Joyce	A	English	453453453	1972-07-31	5631 Rice, Houston, TX	F	25000	333445555	5
Ahmad	V	Jabbar	987987987	1969-03-29	980 Dallas, Houston, TX	M	25000	987654321	4
James	E	Borg	888665555	1937-11-10	450 Stone, Houston, TX	M	55000	NULL	1

DEPARTMENT

Dname	Dnumber	Mgr_ssn	Mgr_start_date
Research	5	333445555	1988-05-22
Administration	4	987654321	1995-01-01
Headquarters	1	888665555	1981-06-19

DEPT_LOCATIONS

Dnumber	Dlocation
1	Houston
4	Stafford
5	Bellaire
5	Sugarland
5	Houston

WORKS_ON

Essn	Pno	Hours
123456789	1	32.5
123456789	2	7.5
666884444	3	40.0
453453453	1	20.0
453453453	2	20.0
333445555	2	10.0
333445555	3	10.0
333445555	10	10.0
333445555	20	10.0
999887777	30	30.0
999887777	10	10.0
987987987	10	35.0
987987987	30	5.0
987654321	30	20.0
987654321	20	15.0
888665555	20	NULL

PROJECT

Pname	Pnumber	Plocation	Dnum
ProductX	1	Bellaire	5
ProductY	2	Sugarland	5
ProductZ	3	Houston	5
Computerization	10	Stafford	4
Reorganization	20	Houston	1
Newbenefits	30	Stafford	4

DEPENDENT

Essn	Dependent_name	Sex	Bdate	Relationship
333445555	Alice	F	1986-04-05	Daughter
333445555	Theodore	M	1983-10-25	Son
333445555	Joy	F	1958-05-03	Spouse
987654321	Abner	M	1942-02-28	Spouse
123456789	Michael	M	1988-01-04	Son
123456789	Alice	F	1988-12-30	Daughter
123456789	Elizabeth	F	1967-05-05	Spouse

Copyright © 2016 Ramez Elmasri and Shamkant B. Navathe

Database Schema of Instructor

- Example:
  - *instructor* (*ID, name, dept_name, salary*)

ID	*name*	*dept_name*	*salary*
22222	Einstein	Physics	95000
12121	Wu	Finance	90000
32343	El Said	History	60000
45565	Katz	Comp. Sci.	75000
98345	Kim	Elec. Eng.	80000
76766	Crick	Biology	72000
10101	Srinivasan	Comp. Sci.	65000
58583	Califieri	History	62000
83821	Brandt	Comp. Sci.	92000
15151	Mozart	Music	40000
33456	Gold	Physics	87000
76543	Singh	Finance	80000

Copyright © 2016 Ramez Elmasri and Shamkant B. Navathe

Schema Diagram for University Database

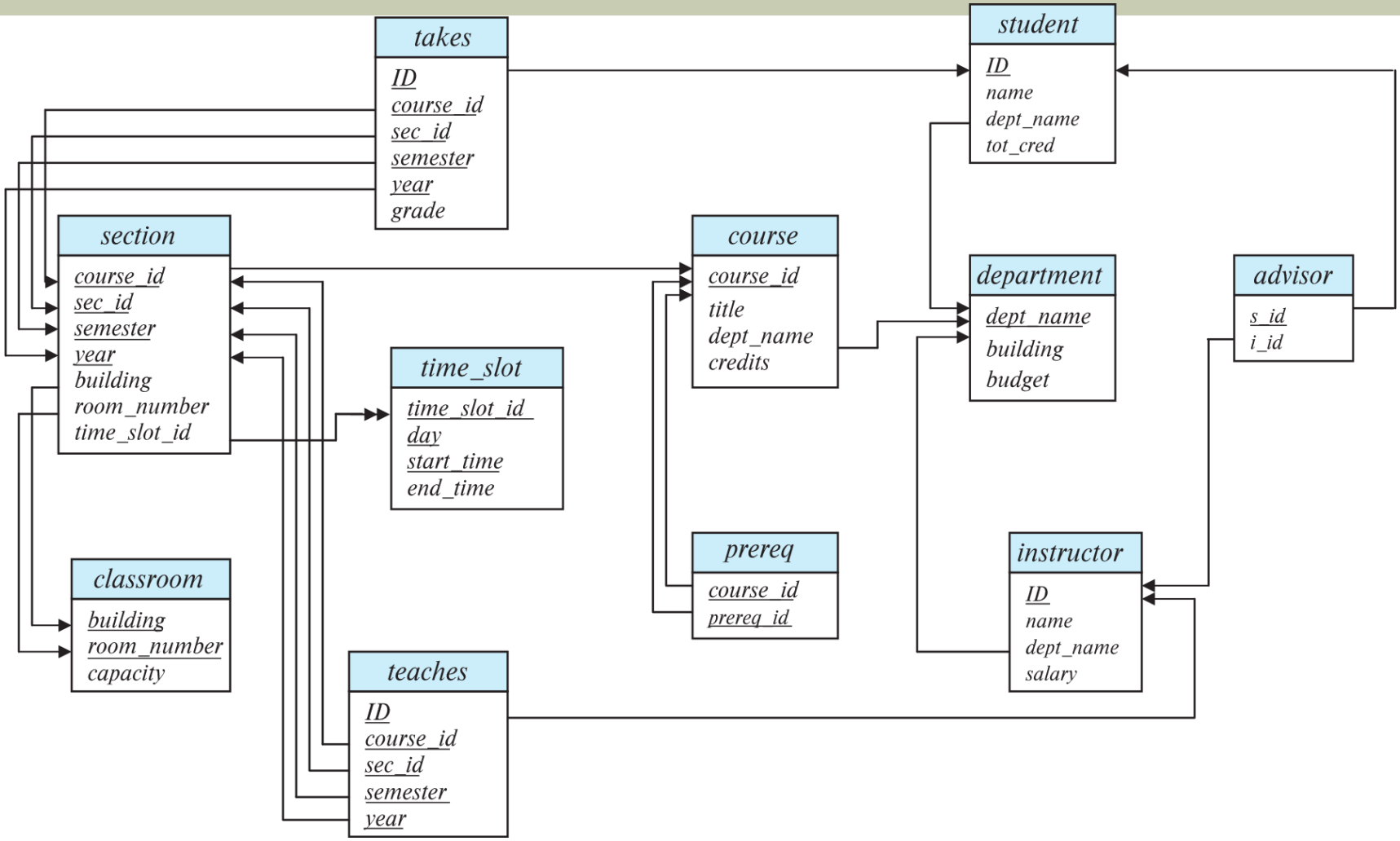

Copyright © 2016 Ramez Elmasri and Shamkant B. Navathe

Relational Algebra Overview

- Relational Algebra consists of several groups of operations
  - Unary Relational Operations
    - SELECT (symbol: σ (sigma))
    - PROJECT (symbol: π (pi))
    - RENAME (symbol: ρ (rho))
  - Relational Algebra Operations From Set Theory
    - UNION ($\cup$), INTERSECTION ($\cap$), DIFFERENCE (or MINUS, **–**)
    - CARTESIAN PRODUCT (**x**)
  - Binary Relational Operations
    - JOIN (several variations of JOIN exist)
    - DIVISION
  - Additional Relational Operations
    - OUTER JOINS, OUTER UNION
    - AGGREGATE FUNCTIONS (These compute summary of information: for example, SUM, COUNT, AVG, MIN, MAX)

Copyright © 2016 Ramez Elmasri and Shamkant B. Navathe

Select Operation

- The **select** operation selects tuples that satisfy a given predicate.
- Notation: $\sigma_p(r)$
- *p* is called the **selection predicate**
- Example: select those tuples of the *instructor* relation where the instructor is in the "Physics" department.
  - Query

$$\sigma_{dept_name=\text{“Physics”}}(instructor)$$

  - Result

ID	*name*	*dept_name*	*salary*
22222	Einstein	Physics	95000
33456	Gold	Physics	87000

Copyright © 2016 Ramez Elmasri and Shamkant B. Navathe

SELECT Example

- Examples:
  - Select the EMPLOYEE tuples whose department number is 4:

$$\sigma_{DNO = 4} (EMPLOYEE)$$

  - Select the employee tuples whose salary is greater than $30,000:

$$\sigma_{SALARY > 30,000} (EMPLOYEE)$$

WORKS_ON

Essn	Pno	Hours

Copyright © 2016 Ramez Elmasri and Shamkant B. Navathe

Select Operation (Cont.)

- We allow comparisons using

  $=, \neq, >, \geq. <. \leq$

  in the selection predicate.
- We can combine several predicates into a larger predicate by using the connectives:

  $\wedge$ (**and**), $\vee$ (**or**), $\neg$ (**not**)
- Example: Find the instructors in Physics with a salary greater $90,000, we write:

  $$\sigma_{dept_name=\text{“Physics”} \wedge salary > 90{,}000}(instructor)$$

- The select predicate may include comparisons between two attributes.
  - Example, find all departments whose name is the same as their building name:
  - $\sigma_{dept_name=building}(department)$

Copyright © 2016 Ramez Elmasri and Shamkant B. Navathe

Project Operation

- A unary operation that returns its argument relation, with certain attributes left out.
- Notation:

$$\Pi_{A_1, A_2, A_3 \ldots A_k}(r)$$

where A_1, A_2, …, A_k are attribute names and r is a relation name.

- The result is defined as the relation of k columns obtained by erasing the columns that are not listed
- Duplicate rows removed from result, since relations are sets

Copyright © 2016 Ramez Elmasri and Shamkant B. Navathe

Database Schema of Instructor

- Example:
  - *instructor* (*ID, name, dept_name, salary*)

ID	*name*	*dept_name*	*salary*
22222	Einstein	Physics	95000
12121	Wu	Finance	90000
32343	El Said	History	60000
45565	Katz	Comp. Sci.	75000
98345	Kim	Elec. Eng.	80000
76766	Crick	Biology	72000
10101	Srinivasan	Comp. Sci.	65000
58583	Califieri	History	62000
83821	Brandt	Comp. Sci.	92000
15151	Mozart	Music	40000
33456	Gold	Physics	87000
76543	Singh	Finance	80000

Copyright © 2016 Ramez Elmasri and Shamkant B. Navathe

Project Operation Example

- Example: eliminate the *dept_name* attribute of *instructor*
- Query*:*

$$\Pi_{ID,\ name,\ salary}\ (instructor)$$

- Result:

ID	*name*	*salary*
10101	Srinivasan	65000
12121	Wu	90000
15151	Mozart	40000
22222	Einstein	95000
32343	El Said	60000
33456	Gold	87000
45565	Katz	75000
58583	Califieri	62000
76543	Singh	80000
76766	Crick	72000
83821	Brandt	92000
98345	Kim	80000

Copyright © 2016 Ramez Elmasri and Shamkant B. Navathe

Sequences of Relational Operations

- The result of a relational-algebra operation is relation and therefore of relational-algebra operations can be composed together into a **relational-algebra expression**.
- Example

  Find the names of all instructors in the Physics department.

$$\Pi_{name}(\sigma_{dept_name = \text{“Physics”}}(instructor))$$

- Instead of giving the name of a relation as the argument of the projection operation, we give an expression that evaluates to a relation.

ID	*name*	*dept_name*	*salary*
22222	Einstein	Physics	95000
12121	Wu	Finance	90000
32343	El Said	History	60000
45565	Katz	Comp. Sci.	75000
98345	Kim	Elec. Eng.	80000
76766	Crick	Biology	72000
10101	Srinivasan	Comp. Sci.	65000
58583	Califieri	History	62000
83821	Brandt	Comp. Sci.	92000
15151	Mozart	Music	40000
33456	Gold	Physics	87000
76543	Singh	Finance	80000

Copyright © 2016 Ramez Elmasri and Shamkant B. Navathe

Unary Relational Operations: RENAME

- The RENAME operator is denoted by ρ (rho)
- In some cases, we may want to *rename* the attributes of a relation or the relation name or both
- The expression:

$$\rho_x (E)$$

  returns the result of expression *E* under the name *x*
- Another form of the rename operation:

$$\rho_{x(A1,A2, .. An)} (E)$$

Copyright © 2016 Ramez Elmasri and Shamkant B. Navathe

RENAME Example (continued)

- If we write:
  - RESULT $\leftarrow \pi_{\text{FNAME, LNAME, SALARY}}$ (DEP5_EMPS)
  - RESULT will have the *same attribute names* as DEP5_EMPS (same attributes as EMPLOYEE)
- If we write:
  - RESULT (F, M, L, S, B, A, SX, SAL, SU, DNO)$\leftarrow$ $\rho_{\text{RESULT (F.M.L.S.B,A,SX,SAL,SU, DNO)}}$(DEP5_EMPS)
  - The 10 attributes of DEP5_EMPS are *renamed* to F, M, L, S, B, A, SX, SAL, SU, DNO, respectively

Note: the $\leftarrow$ symbol is an assignment operator

Copyright © 2016 Ramez Elmasri and Shamkant B. Navathe

Example of applying multiple operations and RENAME

Figure 8.2 Results of a sequence of operations. (a) $\pi_{Fname, Lname, Salary}(\sigma_{Dno=5}(EMPLOYEE))$.
(b) Using intermediate relations and renaming of attributes.

(a)

Fname	Lname	Salary
John	Smith	30000
Franklin	Wong	40000
Ramesh	Narayan	38000
Joyce	English	25000

$$\Pi_{Fnmae,\ Lname,\ Salary}(\sigma_{DNO=5}(Employee))$$

(b)

TEMP

Fname	Minit	Lname	Ssn	Bdate	Address	Sex	Salary	Super_ssn	Dno
John	B	Smith	123456789	1965-01-09	731 Fondren, Houston,TX	M	30000	333445555	5
Franklin	T	Wong	333445555	1955-12-08	638 Voss, Houston,TX	M	40000	888665555	5
Ramesh	K	Narayan	666884444	1962-09-15	975 Fire Oak, Humble,TX	M	38000	333445555	5
Joyce	A	English	453453453	1972-07-31	5631 Rice, Houston, TX	F	25000	333445555	5

R

First_name	Last_name	Salary
John	Smith	30000
Franklin	Wong	40000
Ramesh	Narayan	38000
Joyce	English	25000

Copyright © 2016, 2011, 2007
by Pearson Education, Inc.
All Rights Reserved
PEARSON

Copyright © 2016 Ramez Elmasri and Shamkant B. Navathe

Cartesian-Product Operation

- The Cartesian-product operation (denoted by X) allows us to combine information from any two relations.
- Example: the Cartesian product of the relations *emp* and dep is written as:

  emp X *dept*
- We construct a tuple of the result out of each possible pair of tuples: one from the *emp* relation and one from the *dept* relation (see next slide)

Copyright © 2016 Ramez Elmasri and Shamkant B. Navathe

Cartesian-Product Operation Example

EMP

SSN	Name	DNO
011	John	1
022	Jennifer	2

Dept

Dum	Dname
1	Research
2	Marketing

EMP x Dept

SSN	Name	DNO	Dum	Dname
011	John	1	1	Research
011	John	1	2	Marketing
022	Jennifer	2	1	Research
022	Jennifer	2	2	Marketing

Copyright © 2016 Ramez Elmasri and Shamkant B. Navathe

Relational Algebra Operations from Set Theory: CARTESIAN PRODUCT

- CARTESIAN (or CROSS) PRODUCT Operation
  - This operation is used to combine tuples from two relations in a combinatorial fashion.
  - Denoted by R(A1, A2, . . ., An) x S(B1, B2, . . ., Bm)
  - Result is a relation Q with degree n + m attributes:
    - Q(A1, A2, . . ., An, B1, B2, . . ., Bm), in that order.
  - The resulting relation state has one tuple for each combination of tuples—one from R and one from S.
  - Hence, if R has n_R tuples (denoted as $|R| = n_R$), and S has n_S tuples, then R x S will have $n_R * n_S$ tuples.
  - The two operands do NOT have to be "type compatible"

Copyright © 2016 Ramez Elmasri and Shamkant B. Navathe

Relational Algebra Operations from Set Theory: CARTESIAN PRODUCT (cont.)

- Generally, CROSS PRODUCT is not a meaningful operation
  - Can become meaningful when followed by other operations
- Example (not meaningful):
  - FEMALE_EMPS $\leftarrow \sigma_{SEX='F'}$(EMPLOYEE)
  - EMPNAMES $\leftarrow \pi_{FNAME, LNAME, SSN}$ (FEMALE_EMPS)
  - EMP_DEPENDENTS $\leftarrow$ EMPNAMES x DEPENDENT
- EMP_DEPENDENTS will contain every combination of EMPNAMES and DEPENDENT
  - whether or not they are actually related

Copyright © 2016 Ramez Elmasri and Shamkant B. Navathe

Join Operation

- The Cartesian-Product

$$emp \ X \ dept$$

associates every tuple of instructor with every tuple of teaches.

  - Most of the resulting rows have information about emps who did NOT work for a particular dept.

- To get only those tuples of "*emp* X *dept* " that pertain to emps and the depts that they work for, we write:

$$\sigma_{emp.dno = dept.num} (emp \times dept))$$

Copyright © 2016 Ramez Elmasri and Shamkant B. Navathe

Join Operation (Cont.)

The table corresponding to:

$$\sigma_{emp.dno = dept.num} (emp \times dept))$$

SSN	Name	DNO	Dum	Dname
011	John	1	1	Research
022	Jennifer	2	2	Marketing

Copyright © 2016 Ramez Elmasri and Shamkant B. Navathe

Theta Join Operation (Cont.)

- The **join** operation allows us to combine a select operation and a Cartesian-Product operation into a single operation.
- Consider relations *r* (*R*) and *s* (*S*)
- Let "theta" be a predicate on attributes in the schema R "union" S. The join operation r $\bowtie_\theta$ s is defined as follows:

$$r \bowtie_\theta s = \sigma_\theta (r \times s)$$

- Thus

$$\sigma_{emp.dno = dept.dnun} (emp \times dept))$$

- Can equivalently be written as

$$emp \bowtie_{emp.dno = dept.dnun} dept.$$

Copyright © 2016 Ramez Elmasri and Shamkant B. Navathe

Binary Relational Operations: EQUIJOIN

- EQUIJOIN Operation
- The most common use of join involves join conditions with *equality comparisons* only
- Such a join, where the only comparison operator used is =, is called an EQUIJOIN.
  - In the result of an EQUIJOIN we always have one or more pairs of attributes (whose names need not be identical) that have identical values in every tuple.
  - The JOIN seen in the previous example was an EQUIJOIN.

Copyright © 2016 Ramez Elmasri and Shamkant B. Navathe

NATURAL JOIN Operation

- NATURAL JOIN Operation
  - Another variation of JOIN called NATURAL JOIN — denoted by * — was created to get rid of the second (superfluous) attribute in an EQUIJOIN condition.
    - because one of each pair of attributes with identical values is superfluous
  - The natural join requires that the two join attributes, or each pair of corresponding join attributes, *have the same name* in both relations
  - If this is not the case, a renaming operation is applied first.

Copyright © 2016 Ramez Elmasri and Shamkant B. Navathe

NATURAL JOIN (continued)

- Example: To apply a natural join on the DNUMBER attributes of DEPARTMENT and DEPT_LOCATIONS, it is sufficient to write:
  - DEPT_LOCS ← DEPARTMENT * DEPT_LOCATIONS
- Only attribute with the same name is DNUMBER
- An implicit join condition is created based on this attribute:

DEPARTMENT.DNUMBER=DEPT_LOCATIONS.DNUMBER

DEPARTMENT

Pname	Pnumber	Plocation	Dnum

DEPT_LOCATIONS

Dnumber	Dlocation

DEPARTMENT * DEPT_LOCATIONS

Pname	Pnumber	Plocation	Dnum	Dlocation

Query: Retrieve the name of each department and their working locations

Copyright © 2016 Ramez Elmasri and Shamkant B. Navathe

Additional Relational Operations (continued)

- The OUTER JOIN Operation
  - In NATURAL JOIN and EQUIJOIN, tuples without a *matching* (or *related*) tuple are eliminated from the join result
    - Tuples with null in the join attributes are also eliminated
    - This amounts to loss of information.
  - A set of operations, called OUTER joins, can be used when we want to keep all the tuples in R, or all those in S, or all those in both relations in the result of the join, regardless of whether or not they have matching tuples in the other relation.

Copyright © 2016 Ramez Elmasri and Shamkant B. Navathe

Additional Relational Operations (continued)

- OUTER UNION Operations
  - The outer union operation was developed to take the union of tuples from two relations if the relations are *not type compatible*.
  - This operation will take the union of tuples in two relations R(X, Y) and S(X, Z) that are **partially compatible**, meaning that only some of their attributes, say X, are type compatible.
  - The attributes that are type compatible are represented only once in the result, and those attributes that are not type compatible from either relation are also kept in the result relation T(X, Y, Z).

Copyright © 2016 Ramez Elmasri and Shamkant B. Navathe

Outer Join

EMP

SSN	Name	DNO
011	John	1
022	Jennifer	2
033	Bake	NULL

Dept

DNO	Dname
1	Research
7	Headquarter
2	Marketing

EMP * Dept

SSN	Name	DNO	Dname
011	John	1	Research
022	Jennifer	2	Marketing

EMP ⟕ Dept

SSN	Name	DNO	Dname
011	John	1	Research
022	Jennifer	2	Marketing
033	Bake	NULL	NULL

Copyright © 2016 Ramez Elmasri and Shamkant B. Navathe

EMP

SSN	Name	DNO
011	John	1
022	Jennifer	2
033	Bake	NULL

Dept

DNO	Dname
1	Research
7	Headquarter
2	Marketing

EMP ⟕ Dept

SSN	Name	DNO	Dname
011	John	1	Research
null	null	7	Headquarter
022	Jennifer	2	Marketing

EMP ⟖ Dept

SSN	Name	DNO	Dname
011	John	1	Research
022	Jennifer	2	Marketing
033	Bake	NULL	NULL
null	null	7	Headquarter

Outer Join

Copyright © 2016 Ramez Elmasri and Shamkant B. Navathe

Additional Relational Operations (continued)

- The left outer join operation keeps <u>every tuple</u> in the first or left relation R in R ⟕ S; if no matching tuple is found in S, then the attributes of S in the join result are filled or "padded" with null values.
- A similar operation, right outer join, keeps every tuple in the second or right relation S in the result of R ⟖ S.
- A third operation, full outer join, denoted by ⟗ keeps all tuples <u>in both the left and the right relations</u> when no matching tuples are found, padding them with null values as needed.

Copyright © 2016 Ramez Elmasri and Shamkant B. Navathe

Retrieval a list of employee names and also the name of the department they manage if they happen to mange a department

Administration	4	987654321	1995-01-01
Headquarters	1	888665555	1981-06-19

4	Stafford
5	Bellaire
5	Sugarland
5	Houston

WORKS_ON

Essn	Pno	Hours
123456789	1	32.5
123456789	2	7.5
666884444	3	40.0
453453453	1	20.0

PROJECT

Pname	Pnumber	Plocation	Dnum
ProductX	1	Bellaire	5
ProductY	2	Sugarland	5
ProductZ	3	Houston	5
Computerization	10	Stafford	4

RESULT

Fname	Minit	Lname	Dname
John	B	Smith	NULL
Franklin	T	Wong	Research
Alicia	J	Zelaya	NULL
Jennifer	S	Wallace	Administration
Ramesh	K	Narayan	NULL
Joyce	A	English	NULL
Ahmad	V	Jabbar	NULL
James	E	Borg	Headquarters

Research	5	333445555	1988-05-22
Administration	4	987654321	1995-01-01
Headquarters	1	888665555	1981-06-19

Temp <- Employee $\bowtie$ ssn=mgrssn Department

$\Pi_{Fnmae,\ Minit,\ Lname,\ Dname}$ (*Temp*)

Copyright © 2016 Ramez Elmasri and Shamkant B. Navathe

Example to illustrate UNION, INTERSECT, and DIFFERENCE

Figure 8.4 The set operations UNION, INTERSECTION, and MINUS. (a) Two union-compatible relations. (b) STUDENT ∪ INSTRUCTOR. (c) STUDENT ∩ INSTRUCTOR. (d) STUDENT – INSTRUCTOR. (e) INSTRUCTOR – STUDENT.

(a) **STUDENT**

Fn	Ln
Susan	Yao
Ramesh	Shah
Johnny	Kohler
Barbara	Jones
Amy	Ford
Jimmy	Wang
Ernest	Gilbert

INSTRUCTOR

Fname	Lname
John	Smith
Ricardo	Browne
Susan	Yao
Francis	Johnson
Ramesh	Shah

(b)

Fn	Ln
Susan	Yao
Ramesh	Shah
Johnny	Kohler
Barbara	Jones
Amy	Ford
Jimmy	Wang
Ernest	Gilbert
John	Smith
Ricardo	Browne
Francis	Johnson

Student ∪ Instructor

Student ∩ Instructor

Student – Instructor

(c)

Fn	Ln
Susan	Yao
Ramesh	Shah

(d)

Fn	Ln
Johnny	Kohler
Barbara	Jones
Amy	Ford
Jimmy	Wang
Ernest	Gilbert

(e)

Fname	Lname
John	Smith
Ricardo	Browne
Francis	Johnson

Instructor - Student

ALWAYS LEARNING Fundamentals for Database Systems, 7e Ramez Elmasri | Shamkant B. Navathe Copyright © 2016, 2011, 2007 by Pearson Education, Inc. All Rights Reserved PEARSON

Copyright © 2016 Ramez Elmasri and Shamkant B. Navathe

Relational Algebra Operations from Set Theory

- Type Compatibility of operands is required for the binary set operation UNION $\cup$, (also for INTERSECTION $\cap$, and SET DIFFERENCE –, see next slides)
- R1(A1, A2, ..., An) and R2(B1, B2, ..., Bn) are type compatible if:
  - they have the same number of attributes, and
  - the domains of corresponding attributes are type compatible (i.e. dom(Ai)=dom(Bi) for i=1, 2, ..., n).
- The resulting relation for R1$\cup$R2 (also for R1$\cap$R2, or R1–R2, see next slides) has the same attribute names as the *first* operand relation R1 (by convention)

Copyright © 2016 Ramez Elmasri and Shamkant B. Navathe

Relational Algebra Operations from Set Theory: UNION

- UNION Operation
  - Binary operation, denoted by $\cup$
  - The result of R $\cup$ S, is a relation that includes all tuples that are either in R or in S or in both R and S
  - Duplicate tuples are eliminated
  - The two operand relations R and S must be "type compatible" (or UNION compatible)
    - R and S must have same number of attributes
    - Each pair of corresponding attributes must be type compatible (have same or compatible domains)

Copyright © 2016 Ramez Elmasri and Shamkant B. Navathe

COMPANY Schema for Union example

(1) To retrieve the social security numbers of all employees who either *work in department 5* or

(2) directly supervise an employee who works in department 5

Figure 5.7
Referential integrity constraints displayed on the COMPANY relational database schema.

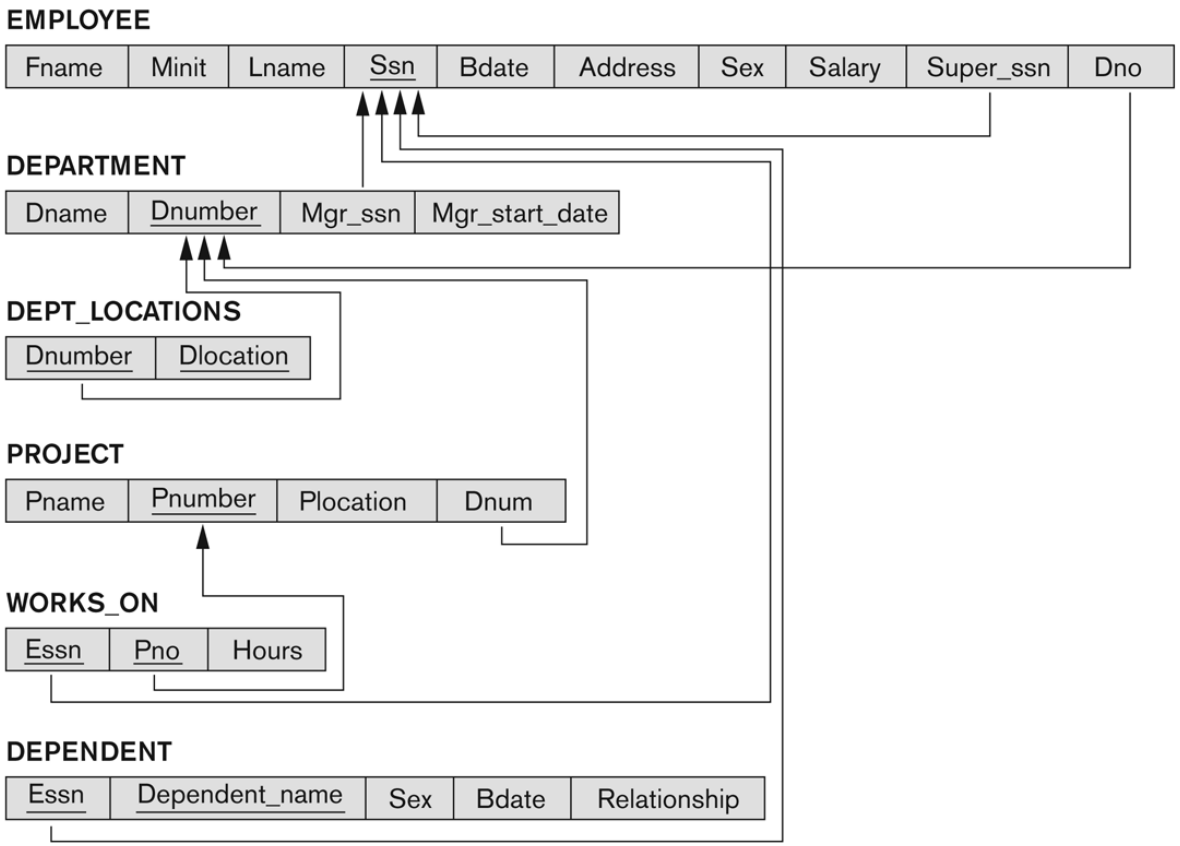

Copyright © 2016 Ramez Elmasri and Shamkant B. Navathe

UNION Example

- Example:
  - To retrieve the social security numbers of all employees who either *work in department 5* (RESULT1 below) or *directly supervise an employee who works in department 5* (RESULT2 below)
  - We can use the UNION operation as follows:

$$DEP5_EMPS \leftarrow \sigma_{DNO=5}(EMPLOYEE)$$
$$RESULT1 \leftarrow \pi_{SSN}(DEP5_EMPS)$$
$$RESULT2(SSN) \leftarrow \pi_{SUPERSSN}(DEP5_EMPS)$$
$$RESULT \leftarrow RESULT1 \cup RESULT2$$

  - The union operation produces the tuples that are in either RESULT1 or RESULT2 or both

Copyright © 2016 Ramez Elmasri and Shamkant B. Navathe

Figure 8.3 Result of the UNION operation RESULT ← RESULT1 ∪ RESULT2.

RESULT1

Ssn
123456789
333445555
666884444
453453453

RESULT2

Ssn
333445555
888665555

RESULT

Ssn
123456789
333445555
666884444
453453453
888665555

Copyright © 2016 Ramez Elmasri and Shamkant B. Navathe

Relational Algebra Operations from Set Theory: INTERSECTION

- INTERSECTION is denoted by $\cap$
- The result of the operation R $\cap$ S, is a relation that includes all tuples that are in both R and S
  - The attribute names in the result will be the same as the attribute names in R
- The two operand relations R and S must be "type compatible"

Copyright © 2016 Ramez Elmasri and Shamkant B. Navathe

Relational Algebra Operations from Set Theory: SET DIFFERENCE (cont.)

- SET DIFFERENCE (also called MINUS or EXCEPT) is denoted by –
- The result of R – S, is a relation that includes all tuples that are in R but not in S
  - The attribute names in the result will be the same as the attribute names in R
- The two operand relations R and S must be "type compatible"

Copyright © 2016 Ramez Elmasri and Shamkant B. Navathe

Some properties of UNION, INTERSECT, and DIFFERENCE

- Notice that both union and intersection are *commutative* operations; that is
  - $R \cup S = S \cup R$, and $R \cap S = S \cap R$
- Both union and intersection can be treated as n-ary operations applicable to any number of relations as both are *associative* operations; that is
  - $R \cup (S \cup T) = (R \cup S) \cup T$
  - $(R \cap S) \cap T = R \cap (S \cap T)$
- The minus operation is not commutative; that is, in general
  - $R - S \neq S - R$

Copyright © 2016 Ramez Elmasri and Shamkant B. Navathe

Complete Set of Relational Operations

- The set of operations including SELECT σ, PROJECT π , UNION $\cup$, DIFFERENCE – , RENAME ρ, and CARTESIAN PRODUCT X is called a *complete set* because any other relational algebra expression can be expressed by a combination of these five operations.
- For example:
  - $R \cap S = (R \cup S) - ((R - S) \cup (S - R))$
  - $R \bowtie_{\text{<join condition>}} S = \sigma_{\text{<join condition>}} (R \times S)$

Copyright © 2016 Ramez Elmasri and Shamkant B. Navathe

Additional Relational Operations: Aggregate Functions and Grouping

- A type of request that cannot be expressed in the basic relational algebra is to specify mathematical **aggregate functions** on collections of values from the database.
- Examples of such functions include retrieving the average or total salary of all employees or the total number of employee tuples.
  - These functions are used in simple statistical queries that summarize information from the database tuples.
- Common functions applied to collections of numeric values include
  - SUM, AVERAGE, MAXIMUM, and MINIMUM.
- The COUNT function is used for counting tuples or values.

Copyright © 2016 Ramez Elmasri and Shamkant B. Navathe

Aggregate Function Operation

- Use of the Aggregate Functional operation $\mathcal{F}$
  - $\mathcal{F}_{\text{MAX Salary}}$ (EMPLOYEE) retrieves the maximum salary value from the EMPLOYEE relation
  - $\mathcal{F}_{\text{MIN Salary}}$ (EMPLOYEE) retrieves the minimum Salary value from the EMPLOYEE relation
  - $\mathcal{F}_{\text{SUM Salary}}$ (EMPLOYEE) retrieves the sum of the Salary from the EMPLOYEE relation
  - $\mathcal{F}_{\text{COUNT SSN, AVERAGE Salary}}$ (EMPLOYEE) computes the count (number) of employees and their average salary
    - Note: count just counts the number of rows, without removing duplicates

Copyright © 2016 Ramez Elmasri and Shamkant B. Navathe

Using Grouping with Aggregation

- The previous examples all summarized one or more attributes for a set of tuples
  - Maximum Salary or Count (number of) Ssn
- Grouping can be combined with Aggregate Functions
- Example: For each department, retrieve the DNO, COUNT SSN, and AVERAGE SALARY
- A variation of aggregate operation $\mathcal{F}$ allows this:
  - Grouping attribute placed to left of symbol
  - Aggregate functions to right of symbol
  - $_{\text{DNO}}\mathcal{F}_{\text{COUNT SSN, AVERAGE Salary}}$ (EMPLOYEE)
- Above operation groups employees by DNO (department number) and computes the count of employees and average salary per department

Copyright © 2016 Ramez Elmasri and Shamkant B. Navathe

The aggregate function operation.

Administration	4	987654321	1995-01-01
Headquarters	1	888665555	1981-06-19

4	Stafford
5	Bellaire
5	Sugarland
5	Houston

WORKS_ON

Essn	Pno	Hours
123456789	1	32.5
123456789	2	7.5
666884444	3	40.0
453453453	1	20.0

PROJECT

Pname	Pnumber	Plocation	Dnum
ProductX	1	Bellaire	5
ProductY	2	Sugarland	5
ProductZ	3	Houston	5
Computerization	10	Stafford	4

Dno $\mathfrak{I}$ COUNT Ssn, AVERAGE Salary (EMPLOYEE).

Dno	Count_ssn	Average_salary
5	4	33250
4	3	31000

$\mathfrak{I}$ COUNT Ssn, AVERAGE Salary (EMPLOYEE).

R

Dno	No_of_employees	Avera

Copyright © 2016 Ramez Elmasri and Shamkant B. Navathe

Binary Relational Operations: DIVISION

- DIVISION Operation
  - The division operation is applied to two relations
  - $R(Z) \div S(X)$, where X subset Z. Let $Y = Z - X$ (and hence $Z = X \cup Y$); that is, let Y be the set of attributes of R that are not attributes of S.
  - The result of DIVISION is a relation T(Y) that includes a tuple t if tuples t_R appear in R with $t_R[Y] = t$, and with
    - $t_R[X] = t_s$ *for every tuple* t_s in S.
  - For a tuple t to appear in the result T of the DIVISION, the values in t must appear in R in combination with *every* tuple in S.

Copyright © 2016 Ramez Elmasri and Shamkant B. Navathe

Example of DIVISION

Figure 8.8 The DIVISION operation. (a) Dividing SSN_PNOS by SMITH_PNOS. (b) T ← R ÷ S.

(a)

SSN_PNOS

Essn	Pno
123456789	1
123456789	2
666884444	3
453453453	1
453453453	2
333445555	2
333445555	3
333445555	10
333445555	20
999887777	30
999887777	10
987987987	10
987987987	30
987654321	30
987654321	20
888665555	20

SMITH_PNOS

Pno
1
2

SSNS

Ssn
123456789
453453453

(b)

R

A	B
a1	b1
a2	b1
a3	b1
a4	b1
a1	b2
a3	b2
a2	b3
a3	b3
a4	b3
a1	b4
a2	b4
a3	b4

S

A
a1
a2
a3

T

B
b1
b4

Copyright © 2016, 2011, 2007
by Pearson Education, Inc.
All Rights Reserved
PEARSON

Copyright © 2016 Ramez Elmasri and Shamkant B. Navathe

Table 8.1 Operations of Relational Algebra

Table 8.1 Operations of Relational Algebra

OPERATION	PURPOSE	NOTATION
SELECT	Selects all tuples that satisfy the selection condition from a relation R.	$\sigma_{<\text{selection condition}>}(R)$
PROJECT	Produces a new relation with only some of the attributes of R, and removes duplicate tuples.	$\pi_{<\text{attribute list}>}(R)$
THETA JOIN	Produces all combinations of tuples from R_1 and R_2 that satisfy the join condition.	$R_1 \bowtie_{<\text{join condition}>} R_2$
EQUIJOIN	Produces all the combinations of tuples from R_1 and R_2 that satisfy a join condition with only equality comparisons.	$R_1 \bowtie_{<\text{join condition}>} R_2$, OR $R_1 \bowtie_{(<\text{join attributes 1}>), (<\text{join attributes 2}>)} R_2$
NATURAL JOIN	Same as EQUIJOIN except that the join attributes of R_2 are not included in the resulting relation; if the join attributes have the same names, they do not have to be specified at all.	$R_1 *_{<\text{join condition}>} R_2$, OR $R_1 *_{(<\text{join attributes 1}>), (<\text{join attributes 2}>)} R_2$ OR $R_1 * R_2$

continued on next slide

Copyright © 2016 Ramez Elmasri and Shamkant B. Navathe

Table 8.1 Operations of Relational Algebra (continued)

Table 8.1 Operations of Relational Algebra

OPERATION	PURPOSE	NOTATION
UNION	Produces a relation that includes all the tuples in R_1 or R_2 or both R_1 and R_2; R_1 and R_2 must be union compatible.	$R_1 \cup R_2$
INTERSECTION	Produces a relation that includes all the tuples in both R_1 and R_2; R_1 and R_2 must be union compatible.	$R_1 \cap R_2$
DIFFERENCE	Produces a relation that includes all the tuples in R_1 that are not in R_2; R_1 and R_2 must be union compatible.	$R_1 - R_2$
CARTESIAN PRODUCT	Produces a relation that has the attributes of R_1 and R_2 and includes as tuples all possible combinations of tuples from R_1 and R_2.	$R_1 \times R_2$
DIVISION	Produces a relation $R(X)$ that includes all tuples $t[X]$ in $R_1(Z)$ that appear in R_1 in combination with every tuple from $R_2(Y)$, where $Z = X \cup Y$.	$R_1(Z) \div R_2(Y)$

Copyright © 2016 Ramez Elmasri and Shamkant B. Navathe

Query Tree Notation

- Query Tree
  - An internal data structure to represent a query
  - Standard technique for estimating the work involved in executing the query, the generation of intermediate results, and the optimization of execution
  - Nodes stand for operations like selection, projection, join, renaming, division, ….
  - Leaf nodes represent base relations
  - A tree gives a good visual feel of the complexity of the query and the operations involved
  - Algebraic Query Optimization consists of rewriting the query or modifying the query tree into an equivalent tree.

(see Chapter 15)

Copyright © 2016 Ramez Elmasri and Shamkant B. Navathe

Example of Query Tree

Figure 8.9 Query tree corresponding to the relational algebra expression for Q2.

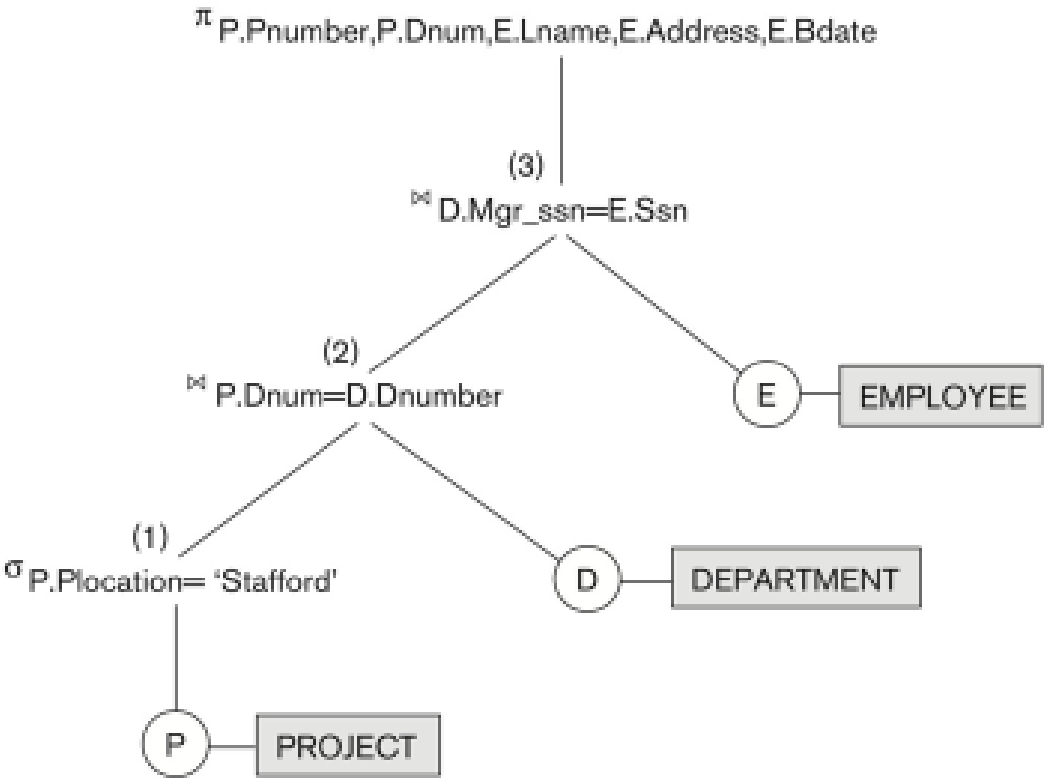

Copyright © 2016, 2011, 2007 by Pearson Education, Inc. All Rights Reserved PEARSON

Copyright © 2016 Ramez Elmasri and Shamkant B. Navathe

Examples of Queries in Relational Algebra : Procedural Form

- **Q1: Retrieve the name and address of all employees who work for the 'Research' department.**

  RESEARCH_DEPT $\leftarrow \sigma_{\text{DNAME='Research'}}$ (DEPARTMENT)

  RESEARCH_EMPS $\leftarrow$ (RESEARCH_DEPT $\bowtie_{\text{DNUMBER= DNOEMPLOYEE}}$ EMPLOYEE)

  RESULT $\leftarrow \pi_{\text{FNAME, LNAME, ADDRESS}}$ (RESEARCH_EMPS)

- **Q6: Retrieve the names of employees who have no dependents.**

  ALL_EMPS $\leftarrow \pi_{\text{SSN}}$(EMPLOYEE)

  EMPS_WITH_DEPS(SSN) $\leftarrow \pi_{\text{ESSN}}$(DEPENDENT)

  EMPS_WITHOUT_DEPS $\leftarrow$ (ALL_EMPS - EMPS_WITH_DEPS)

  RESULT $\leftarrow \pi_{\text{LNAME, FNAME}}$ (EMPS_WITHOUT_DEPS * EMPLOYEE)

Copyright © 2016 Ramez Elmasri and Shamkant B. Navathe

Examples of Queries in Relational Algebra – Single expressions

As a single expression, these queries become:

- **Q1: Retrieve the name and address of all employees who work for the 'Research' department.**

$$\pi_{\text{Fname, Lname, Address}} (\sigma_{\text{Dname= 'Research'}} (\text{DEPARTMENT} \bowtie_{\text{Dnumber=Dno}} (\text{EMPLOYEE}))$$

- **Q6: Retrieve the names of employees who have no dependents.**

$$\pi_{\text{Lname, Fname}}((\pi_{\text{Ssn}} (\text{EMPLOYEE}) - \rho_{\text{Ssn}} (\pi_{\text{Essn}} (\text{DEPENDENT}))) * \text{EMPLOYEE})$$

Copyright © 2016 Ramez Elmasri and Shamkant B. Navathe

Chapter Summary

- Relational Algebra
  - Unary Relational Operations
  - Relational Algebra Operations From Set Theory
  - Binary Relational Operations
  - Additional Relational Operations
  - Examples of Queries in Relational Algebra

Copyright © 2016 Ramez Elmasri and Shamkant B. Navathe